(120IO) ENGLISH 7.5” X 10.3” PANTONE 295U 10/29/2019

OWNER’S MANUAL

English **120A**

IMPORTANT SAFETY RULES

Please read, understand, and follow all instructions carefully before installing and using this product. keep for future reference.

GRAPHITE GRAY PANEL™ POOL

13’8” (417 cm) & 15’8” (478 cm) models

For illustrative purposes only. Accessories may not be provided with pool.

Don’t forget to try these other fine Intex products: Pools, Pool Accessories, Inflatable Pools and In-Home Toys, Airbeds and Boats available at fine retailers or visit our website listed below. Due to a policy of continuous product improvement, Intex reserves the right to change specifications and appearance, which may result in updates to the instruction manual without notice.

INTEX®

©2019 Intex Marketing Ltd. - Intex Development Co. Ltd. - Intex Recreation Corp. All rights reserved/Tous droits réservés/Todos los derechos reservados/Alle Rechte vorbehalten.
Printed in China/Imprimé en Chine/Impreso en China/Gedruckt in China.

®™ Trademarks used in some countries of the world under license from/®™ Marques utilisées dans certains pays sous licence de/ Marcas registradas utilizadas en algunos países del mundo bajo licencia de/Warenzeichen verwendet in einigen Ländern der Welt in Lizenz von/**Intex Marketing Ltd. to/à/a/an Intex Development Co. Ltd., G.P.O Box 28829, Hong Kong & Intex Recreation Corp., P.O. Box 1440, Long Beach, CA 90801** • Distributed in the European Union by/Distribué dans l’Union Européenne par/Distribuido en la unión Europea por/Vertrieb in der Europäischen Union durch/**Intex Trading B.V., Venneveld 9, 4705 RR Roosendaal – The Netherlands**
www.intexcorp.com

120-*A*-R1-2011

TABLE OF CONTENTS

Warnings / Important safety rules..... **3-4**

Parts References..... **5-6**

Setup Instructions..... **7-15**

Pool Maintenance and Chemicals..... **16-17**

Common Pool Problems..... **16**

Pool Draining..... **17**

Storage..... **17-18**

General Aquatic Safety..... **18**

Limited Warranty..... **19**

Special Introductory note:

Thanks for buying an Intex pool and enclosure. Please read this manual before setting up your pool and enclosure. This information will help extend the pool life and make the pool safer for your family's enjoyment. A team of 2-3 people is recommended for pool and enclosure set up. Additional people will speed up the installation.

No tools are required for the assembly.

IMPORTANT SAFETY RULES

Read, Understand and Follow All Instructions Carefully Before Installing and Using this Product.

⚠ WARNING

- **Continuous and competent adult supervision of children and the disabled is required at all times.**
- Secure all doors, windows and safety barriers to prevent unauthorized, unintentional or unsupervised pool entry.
- Install a safety barrier that will eliminate access to the pool for young children and pets.
- Pool and pool accessories are to be assembled and disassembled by adults only.
- Never dive, jump or slide into an above-ground pool or any shallow body of water.
- Failure to set up pool on flat, level, compact ground or over filling could result in the pool's collapse and the possibility that a person lounging in the pool could be swept out/ejected.
- Do not lean, straddle, or exert pressure on the inflatable ring or top rim as injury or flooding could occur. Do not allow anyone to sit on, climb, or straddle the sides of the pool.
- Remove all toys and flotation devices from, in, and around the pool when it is not in use. Objects in the pool attract young children.
- Keep toys, chairs, tables, or any objects that a child could climb on at least four feet (1.22 meters) away from the pool.
- Keep rescue equipment by the pool and clearly post emergency numbers at the phone closest to the pool. Examples of rescue equipment: coast guard approved ring buoy with attached rope, strong rigid pole not less than twelve feet (12') [3.66m] long.
- Never swim alone or allow others to swim alone.
- Keep your pool clean and clear. The pool floor must be visible at all times from the outside barrier of the pool.
- If swimming at night use properly installed artificial lighting to illuminate all safety signs, ladders, pool floor and walkways.
- Stay away from the pool when using alcohol or drugs/medication.
- Keep children away from pool covers to avoid entanglement, drowning, or other serious injury.
- Pool covers must be completely removed before pool use. Children and adults cannot be seen under a pool cover.
- Do not cover the pool while you or anyone else is in the pool.
- Keep the pool and pool area clean and clear to avoid slips and falls and objects that may cause injury.
- Protect all pool occupants from recreational water illnesses by keeping the pool water sanitized. Don't swallow the pool water. Practice good hygiene.
- All pools are subject to wear and deterioration. Certain types of excessive or accelerated deterioration can lead to an operation failure, and can ultimately cause the loss of large quantities of water from your pool. Therefore, it is very important that you properly maintain your pool on a regular basis.
- This pool is for outdoor use only.
- Empty pool completely when not in use for a longer period and safely store the empty pool in such a way that it does not collect water from rain or any other source, and to prevent from being blown away by strong wind. See storage instructions.
- While the swimming pool is in use, you will need to operate the filter pump to ensure that there is at least one complete change of water a day. Consult your pump's manual to calculate the necessary operating hours.

POOL BARRIERS AND COVERS ARE NOT SUBSTITUTES FOR CONTINUOUS AND COMPETENT ADULT SUPERVISION. POOL DOES NOT COME WITH A LIFEGUARD. ADULTS ARE THEREFORE REQUIRED TO ACT AS LIFEGUARDS OR WATER WATCHERS AND PROTECT THE LIVES OF ALL POOL USERS, ESPECIALLY CHILDREN, IN AND AROUND THE POOL.

FAILURE TO FOLLOW THESE WARNINGS MAY RESULT IN PROPERTY DAMAGE, SERIOUS INJURY OR DEATH.

Advisory:
Pool owners may need to comply with local or state laws relating to childproof fencing, safety barriers, lighting, and other safety requirements. Customers should contact their local building code enforcement office for further details.

SAVE THESE INSTRUCTIONS

IMPORTANT SAFETY RULES

Please read, understand, and follow all instructions carefully before installing and using this product. These warnings, instructions, and safety guidelines address some common risks of water recreation, but they cannot cover all risks and dangers in all cases. Always use caution, common sense, and good judgment when enjoying any water activity. Keep for future reference. Packaging must be read carefully and kept for future reference. See product for additional warnings.

General

- Check pins, bolts and/or screws for rust; splinters or any sharp edges regularly, especially accessible surfaces, to avoid injuries.

Non swimmers safety

- Continuous, active, and vigilant supervision of weak swimmers and non-swimmers by a competent adult is required at all times (remembering that children under five are at the highest risk of drowning).
- Designate a competent adult to supervise the pool each time it is being used.
- Weak swimmers or non-swimmers should wear personal protection equipment when using the pool.
- When the pool is not in use, or unsupervised, remove all toys from the swimming pool and its surrounding to avoid attracting children to the pool.

Safety devices

- It is recommended to install a barrier (and secure all doors and windows, where applicable) to prevent unauthorized access to the swimming pool.
- Barriers, pool covers, pool alarms, or similar safety devices are helpful aids, but they are not substitutes for continuous and competent adult supervision.

Safety equipment

- It is recommended to keep rescue equipment (e.g. a ring buoy) by the pool.
- Keep a working phone and a list of emergency phone numbers near the pool.

Safe use of the pool

- Encourage all users especially children to learn how to swim
- Learn Basic Life Support (Cardiopulmonary Resuscitation - CPR) and refresh this knowledge regularly. This can make a life-saving difference in the event of an emergency.
- Instruct all pool users, including children, what to do in case of an emergency
- Never dive into any shallow body of water. This can lead to serious injury or death.
- Do not use the swimming pool when using alcohol or medication that may impair your ability to safely use the pool.
- When pool covers are used, remove them completely from the water surface before entering the pool.
- Protect pool occupants from water related illnesses by keeping the pool water treated and practicing good hygiene. Consult the water treatment guidelines in the user's manual.
- Store chemicals (e.g. water treatment, cleaning or disinfection products) out of the reach of children.
- Removable ladders shall be placed on a horizontal surface.
- Observe and follow the warnings and safety signs on the pool wall.

PARTS REFERENCE

Before assembling your product, please take a few minutes to check the contents and become familiar with all the parts.

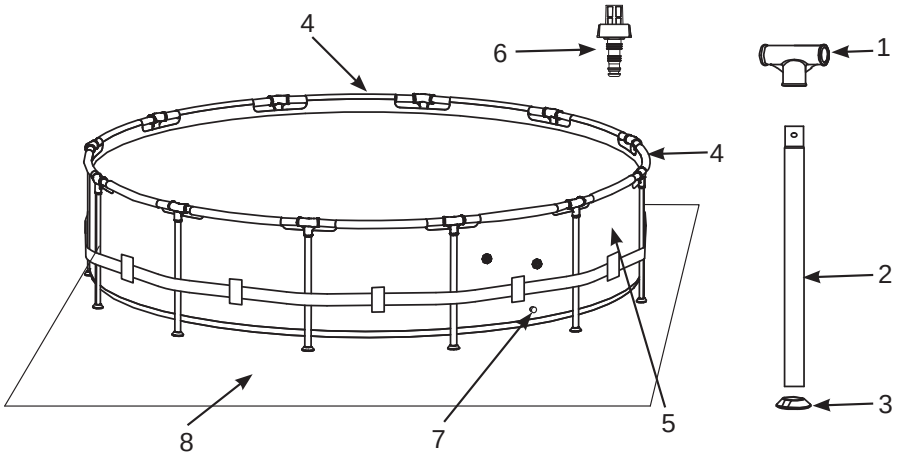

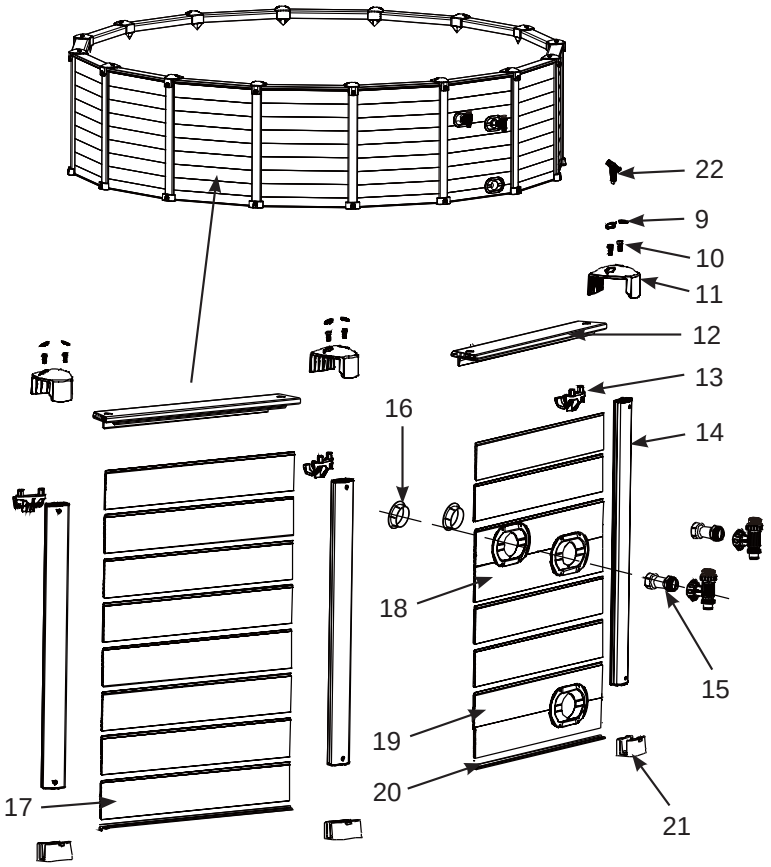

NOTE: Drawings for illustration purpose only. Actual product may vary. Not to scale.

REF. NO.	DESCRIPTION	POOL SIZE & QUANTITIES	
		13’8” x 43” (417cm x 109 cm)	15’8" x 49" (478 cm x124 cm)
1	T - JOINT	13	15
2	VERTICAL LEG	13	15
3	LEG CAP	13	15
4	HORIZONTAL BEAM	13	15
5	POOL LINER (DRAIN VALVE CAP INCLUDED)	1	1
6	DRAIN CONNECTOR	1	1
7	DRAIN VALVE CAP	1	1
8	GROUND CLOTH	1	1
9	WATERPROOF CAP (WITH 4 EXTRA)	30	34
10	BOLT (WITH 4 EXTRA)	30	34
11	TOP CLAMP COVER	13	15
12	TOP BOARD	13	15
13	TOP CLAMP	13	15
14	SUPPORT POST	13	15
15	PLUNGER VALVE CONNECTOR	2	2
16	STRAINER VALVE CAP	2	2
17	SIDE BOARD	87	116
18	SIDE BOARD COMBINATION WITH TWO HOLES	1	1
19	SIDE BOARD COMBINATION WITH ONE HOLE	1	1
20	BOTTOM RAIL	13	15
21	BOTTOM CAP	13	15
22	BOLT WRENCH	2	2

REF. NO.	DESCRIPTION	13’8” x 43” (417cm x 109 cm)	15’8” x 49” (478 cm x124 cm)
		SPARE PART NO.	
1	T - JOINT	12799	12799
2	VERTICAL LEG	12816	12818
3	LEG CAP	12138	12138
4	HORIZONTAL BEAM	12808	12808
5	POOL LINER (DRAIN VALVE CAP INCLUDED)	12725	12726
6	DRAIN CONNECTOR	10201	10201
7	DRAIN VALVE CAP	11044	11044
8	GROUND CLOTH	10080	18927
9	WATERPROOF CAP (WITH 4 EXTRA)	12172	12172
10	BOLT (WITH 4 EXTRA)	12173	12173
11	TOP CLAMP COVER	12174	12174
12	TOP BOARD	12199	12199
13	TOP CLAMP	12907	12907
14	SUPPORT POST	12549	12201
15	PLUNGER VALVE CONNECTOR	11040	11040
16	STRAINER VALVE CAP	11240	11240
17	SIDE BOARD	12203	12203
18	SIDE BOARD COMBINATION WITH TWO HOLES	12205	12205
19	SIDE BOARD COMBINATION WITH ONE HOLE	12206	12206
20	BOTTOM RAIL	12208	12208
21	BOTTOM CAP	12218	12218
22	BOLT WRENCH	11053	11053

POOL SETUP

IMPORTANT SITE SELECTION AND GROUND PREPARATION INFORMATION

⚠ WARNING

- **The pool location must allow you to secure all doors, windows, and safety barriers to prevent unauthorized, unintentional or unsupervised pool entry.**
- **Install a safety barrier that will eliminate access to the pool for young children and pets.**
- **Failure to set up the pool on flat, level, compact ground and to assemble and fill with water in accordance with the following instructions could result in the pool's collapse or the possibility that a person lounging in the pool could be swept out/ejected, resulting in serious injury or property damage.**
- **Risk of electric shock: connect the filter pump only to a grounding type receptacle protected by a ground-fault circuit interrupter (GFCI) or residual current device (RCD). To reduce the risk of an electrical shock, do not use extension cords, timers, plug adapters or converter plugs to connect the pump to an electrical supply. Always provide a properly located outlet. Locate the cord where it cannot be damaged by lawn mowers, hedge trimmers, and other equipment. See the filter pump manual for additional warnings and instructions.**
- **Risk of serious injury: do not attempt to assemble pool in high wind conditions.**

Select an outdoor location for the pool with the following requirements in mind:

1. The area where the pool is to be set up must be **absolutely flat and level**. **Do not** set up the pool on a slope or inclined surface.
2. The ground surface must be compacted and firm enough to withstand the pressure and weight of a fully set up pool. **Do not** set up the pool on mud, sand, soft or loose soil conditions.
3. **Do not** set up the pool on a deck, balcony or platform, which may collapse under the weight of the filled pool.
4. The pool requires at least 4 feet of space all around pool from objects that a child could climb on to gain access to the pool.
5. Grass under the pool will be damaged. Splash out chlorinated pool water could damage the surrounding vegetation.
6. Eliminate all aggressive grasses first. Certain types of grass such as St. Augustine and Bermuda, may grow through the liner. Grass growing through the liner it is not a manufacture defect and is not covered under warranty.
7. The area shall facilitate drainage of the pool water after each use and/or for long term pool storage.

POOL SETUP (continued)

GROUND PREPARATION

Select an outdoor location for the pool which should be on a level concrete pad. If there is no concrete pad available, follow the instructions below to prepare the installation area. It is important you ask a professional (builder or gardener) to perform the following ground preparation.

NOTE: Tools are not included.

1. Mark the installation area

- Once the location area is chosen, drive stake at center point of where you wish pool to be located. Attach string to center stake. Measure the length A on string, and attach marking stick, paint marker, or funnel with flour to string. Mark circumference of pool area using string and marker **(see drawing 1.1)**.

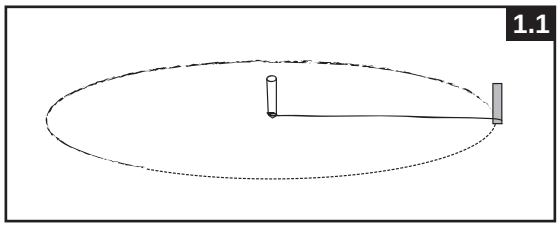

- For 13’8” (417 cm) pool, where A = 7’3” (221 cm) = Radius of grass area need to be removed and leveled.
  For 15'8" (478 cm) pool, where A = 8’3” (251.5 cm) = Radius of grass area need to be removed and leveled.
  (see drawing 1.2).

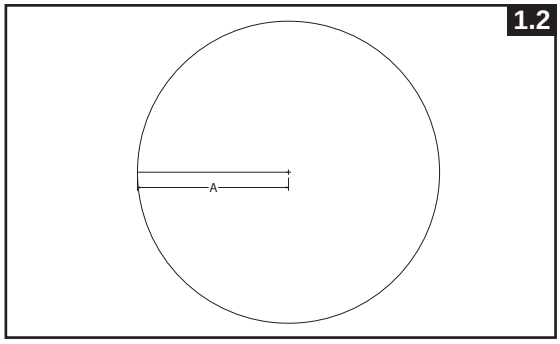

2. Clear the installation area

- Remove all grass, stones and sticks from marked area. Also remove center stake and string.

3. Leveling

- Establish lowest point in pool area. Level entire pool site by digging or scraping away uneven areas to the level of the lowest point. **Always remove material from the top of the slope rather than filling in the bottom** to ensure greater ground stability and firmness. When all the areas are level and when excess ground is removed, you may fill any **small low areas** which are left to level (with fined dirt). Always compact and level ground afterwards **(see drawing 2.1)**.

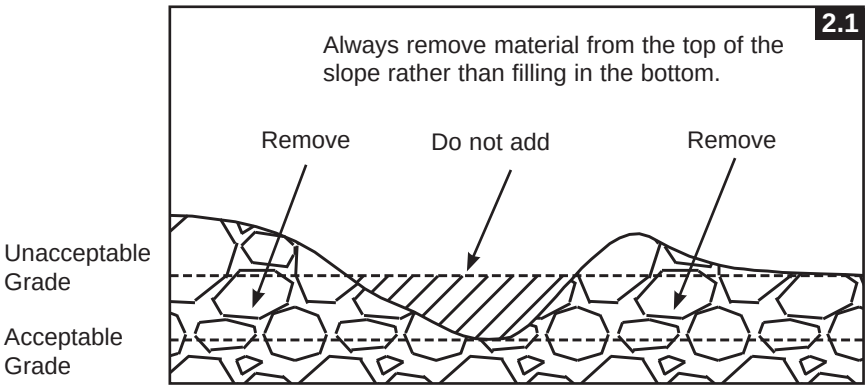

POOL SETUP (continued)

- Use a large mason rule (aluminum or wood) and a level. Level out the ground by cutting rectangles (or squares), locating this rule in the selected and cleaned area **(see drawing 2.2)**.

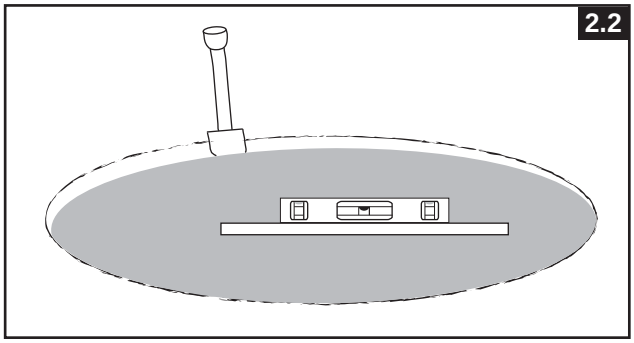

4. Finishing

- On the cleaned and leveled ground, spread a light coat of sieved dirt to a maximum depth of 1/2 inch (1 cm). Spray water and compact it (with a garden roller). Double check and ensure it is well leveled. The ground has to be perfectly level in order to proceed further.

5. Patio block installation

- Purchase 13 pieces of patio block for 13’8” pool or 15 pieces of patio block for 15’8” pool. The minimum dimensions of each block should be 18” x 18” x 2”. Mark the area where the blocks will be buried **(see drawing 3.1)**, then remove 2” (5.08 cm) of soil from the marked area **(see drawing 3.2)**.
- For 13’8” (417 cm) pool, where
  A = 7’3” (221 cm) = Radius of grass area need to be removed and leveled.
  B = 3’5” (104.1 cm) = Distance between each Patio Block.
  For 15’8” (478 cm) pool, where
  A = 8’3” (251.5 cm) = Radius of grass area need to be removed and leveled.
  B = 3’5” (104.1 cm) = Distance between each Patio Block.

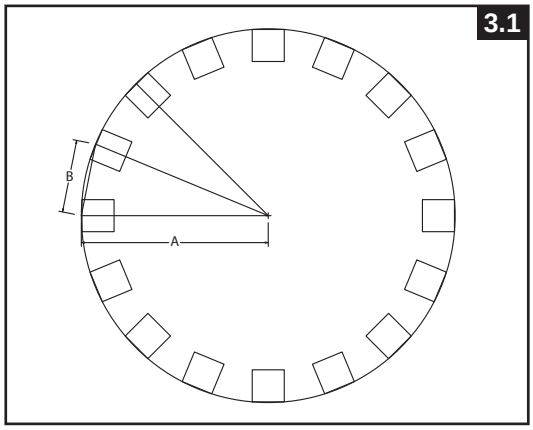

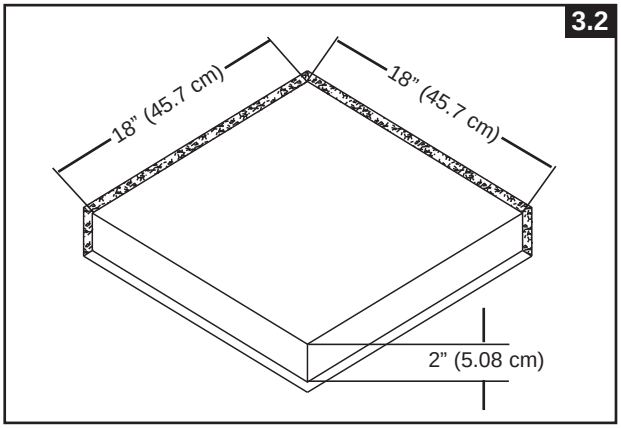

- The top of blocks should be flush with soil surface and level with the area surface and with all patio blocks around entire pool **(see drawing 3.3)**.

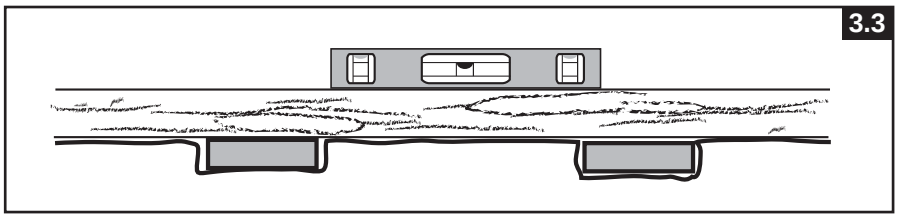

POOL SETUP (continued)

You may have purchased this pool with the Intex Krystal Clear™ filter pump. The pump has its own separate set of installation instructions. First assemble your pool unit and then set up the filter pump.

Estimated assembly time 120 minutes. (Note the assembly time is only approximate and individual assembly experience may vary.)

1. Liner preparation

- Open the carton containing the liner, joints, legs, etc., very carefully as this carton can be used to store the pool during the winter months or when not in use.

- Take out the ground cloth **(8)** and spread it over the cleared area. Then take out the liner **(5)** and spread it out over the ground cloth, with the drain valve directed towards the draining area. Place the drain valve away from the house. Allow the sun to warm up the liner before inserting the beams **(4)** into the sleeve openings.
  IMPORTANT: Always set up the pool unit with at least 2 persons. Do not drag the liner across the ground as this can cause liner damage and pool leakage (see drawing 4).

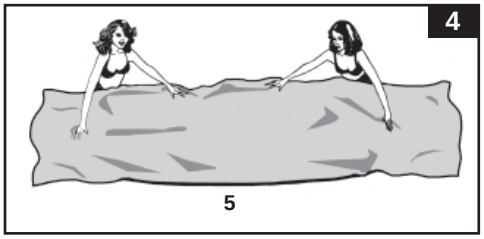

- During the set-up of the pool liner, point the hose connections or openings in the direction of the electric power source. The outer edge of the pool should be within reach of the pump's electrical connection.

2. Horizontal beams assembly

- The frame pool's legs **(2)** and beams **(4)** fall into two groups. The larger diameters are the horizontal beams that are slid (pushed) into the sleeve openings at the top of the liner. The smaller diameters are the vertical legs. Both these legs and beams fit into the T-joints **(1)**.
  NOTE: Sprinkle some talcum powder over the horizontal beams before sliding them into the pool liner sleeve. This will make removal of the beams from the liner easier during the disassembly of the pool.

- Starting at any location, but always working in the same direction, push the horizontal beam into the sleeve. Once the beam is centered take one of the T-joints and attach the joint to one end of the beam. Push the beam firmly into the T-joint. Repeat this procedure in a circular fashion until all the beams and joints have been connected **(see drawings 5.1 & 5.2)**.
  NOTE: It's important to start from **one location and work in the same direction until the last attachment.** Do not start from multiple locations as this will make the connections difficult for the last few beams and joints.

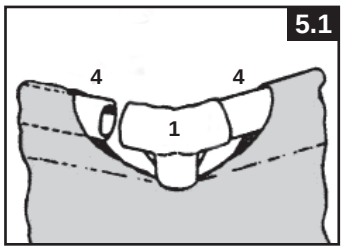

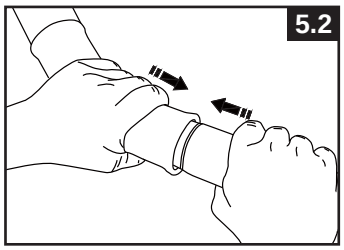

POOL SETUP (continued)

The last joint connection may be difficult to complete. You can do it though, if you first simultaneously raisethe last joint and beam about 2 inches (5 cm). Now, insert the beam into the joint while lowering the pieces into position. The beam will easily slide into the joint (see drawing 5.3). Ensure that the last joint is fully connected before proceeding to connecting the legs.

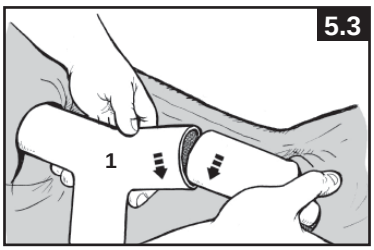

3. Vertical legs assembly

- Attach the leg's end cap **(3)** to the bottom of each leg **(2)** first. With the beams and T-joints assembly resting on the ground, slide one vertical leg into the belt loop located in the middle of the pool liner and insert th6e top of the leg into the bottom of the T-joint **(1) (see drawing 6.1)**. Continue the process with all the vertical legs.

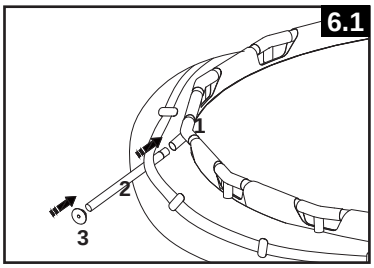

- Lift the beams assembly and make sure all the legs are in a vertical position **(see drawing 6.2)**. Push all the T-joints downward to ensure they are firmly connected to the legs.

- Pull gently, in an outward direction, the bottom of the leg making sure the leg is vertical and perpendicular to the level ground.

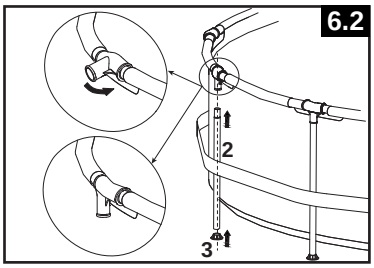

4. Filling of the pool

- See Krystal Clear™ filter pump manual, install the strainer nuts, flat strainer rubber washers and threaded strainer connectors on the liner pre-cut holes. Use strainer valve caps **(16)** and plug them into the threaded strainer connectors from the inside of the pool so water will not run out while filling.

- Before filling the pool with water, ensure that the drain plug inside the pool is closed and that the drain cap on the outside is screwed on tightly. Fill the pool with no more than 1 inch (2.5 cm) of water. Check to see whether the water is level.

  IMPORTANT: If the water in the pool flows to one side, the pool is not completely level. Setting up the pool on unlevel ground will cause the pool to tilt resulting in the sidewall material bulging and a potential collapse of the pool. If the pool is not completely level, you must drain the pool, level the area or move the pool to a different area that is level, and re-fill the pool, following the above directions.

- Smooth out the bottom liner wrinkles (from inside the pool) by pushing out where the pool floor and pool sides meet. Or, (from outside pool) reach under the side of the pool, grasp the pool floor and pull in an outward direction. If the ground cloth is causing the wrinkles, have 2 people pull from opposite sides to remove all wrinkles. Use the properly assembled pool ladder when entering or exiting the pool during this process. Also make sure all the legs are vertical and perpendicular to the ground.

5. Fill the pool with water up to just below the sleeve line. **(see drawing 7)**.

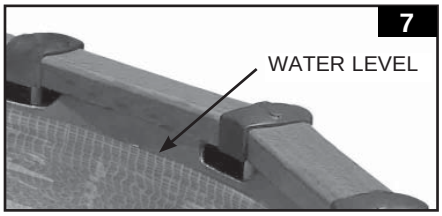

POOL ENCLOSURE SETUP

Once the pool has been filled with water, and it has been confirmed that it is completely level and that all vertical legs are positioned in the middle of each patio block, proceed with the assembly of the pool enclosure.

1. Top clamp installation

- Fasten a top clamp **(13)** to the T-joint of the pool frame from the underneath. Ensure the two bolts on top clamp are facing upward. Repeat the procedure until all the top clamps are fastened to the T-joints of the pool frame **(see drawings 8.1 & 8.2)**.

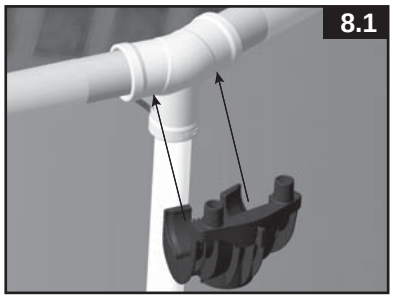

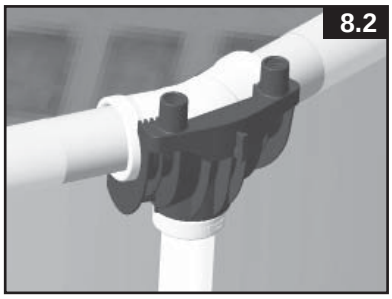

2. Bottom cap and bottom rail installation

- Place a bottom cap **(21)** on the ground and align it with the leg cap. Ensure that the threaded side hole in the bottom cap is facing outward. Place all bottom caps in position.
- Starting at any location, but always working in the same direction, connect a bottom rail **(20)** in between two bottom caps **(21)**. Ensure the pre-drilled holes on the bottom rail hook through the knobs on the bottom cap. Repeat this procedure in a circular fashion until all the bottom rails and bottom caps have been connected. Adjust the distance of the bottom cap to the leg cap by estimating that the support post **(14)** will stand vertical after it is installed **(see drawings 9.1 & 9.2)**.

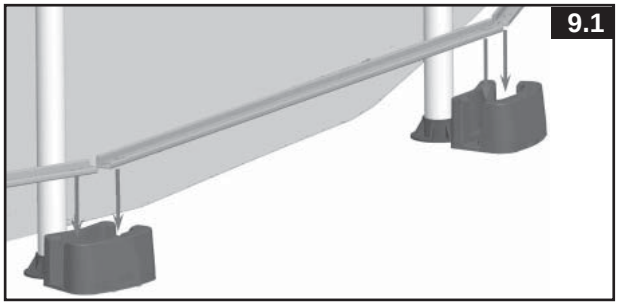

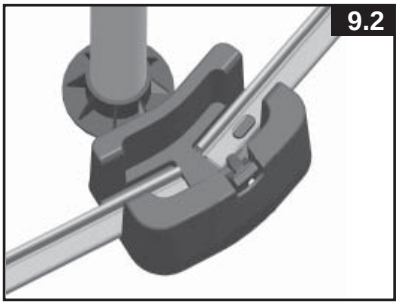

3. Support post installation

- Remove the cardboard inserts from the both slides of each support post.
- Insert the support post **(14)** into the bottom cap **(21)**. Lift up the support post slightly to let the slot on the upper end of the support post hook onto the ridge at the top clamp. Push downward to ensure the support post is connected firmly with the top clamp and inserted in the bottom cap **(see drawings 10.1, 10.2 & 10.3)**.
- Repeat these procedures until all the support posts are joined to the top clamps and bottom caps **(see drawing 10.4)**.

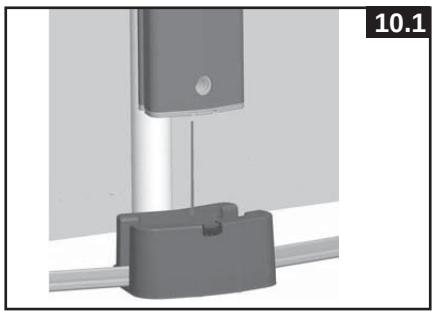

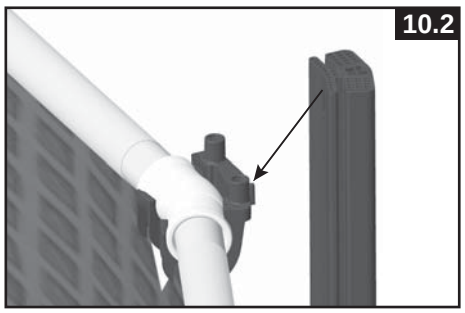

POOL ENCLOSURE SETUP (continued)

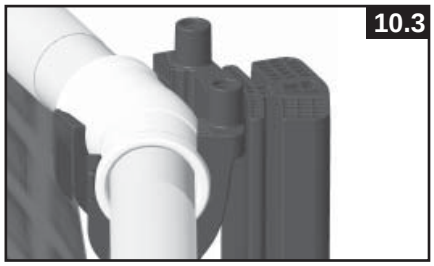

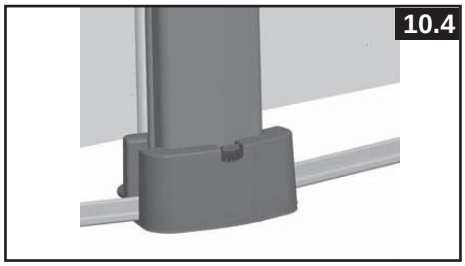

4. Side panel installation

The number of the side panels depends of the size of your pool. There are two side panels which need special attention during installation: First, the side panel which needs to be installed outside the pool inlet & outlet holes, and second, the side panel with the warning panel which needs to be installed in a location that the warning display is easily seen by pool users before entering the pool. The side boards for these two special panels are wrapped separately from others.

4a. Side panel with holes installation

- Locate the side panel with holes outside the pool liner where the inlet & outlet holes are located. Unwrap the side boards from pack and slide the side board combination with one hole **(19)** first down the support posts and insert onto the vertical edge of the bottom rail. Follow with the number sequence from bottom to top. The groove of the board needs to be inserted fully onto the tongue of previous board. The printing on the side boards needs to be facing outward. Then slide the side board combination with two holes **(18)** marked with number “5 & 6” through the support posts and insert onto the tongue of side board marked with number “4” **(see drawings 11.1 & 11.2)**.

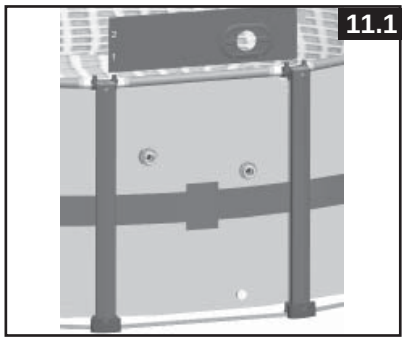

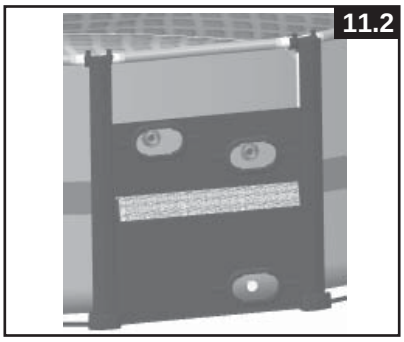

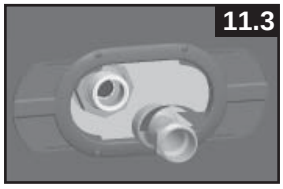

- In clockwise motion screw the plunger valve connectors **(15)** onto the threaded strainer connectors which were already installed on the pool liner during the pool set up **(see drawing 11.3)**. In a clockwise motion screw the plunger valves onto the plunger valve connectors **(15)**. Close the plunger valves by pushing the handle down and turn in a clockwise direction to lock as described in filter pump manual. Now, the strainer valve caps **(16)** can be unplugged out of the threaded strainer connectors from the inside of the pool **(see drawings 11.4 & 11.5)**.
- Continue to finish the side panel installation by installing the rest of the side boards marked with number “7” and “8” **(see drawings 11.6, 11.7 & 11.8)**.

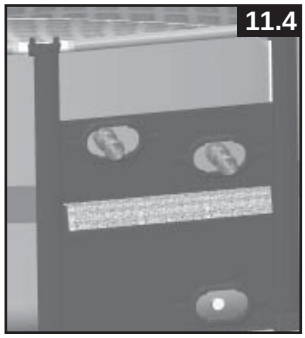

POOL ENCLOSURE SETUP (continued)

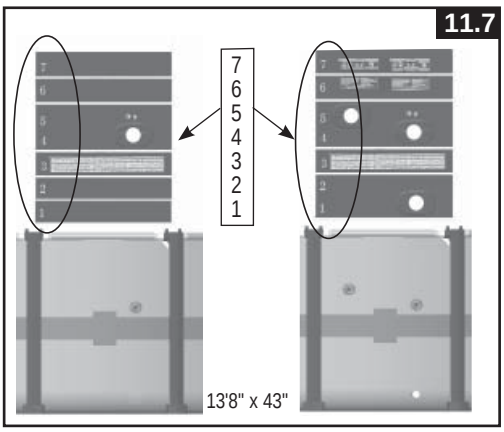

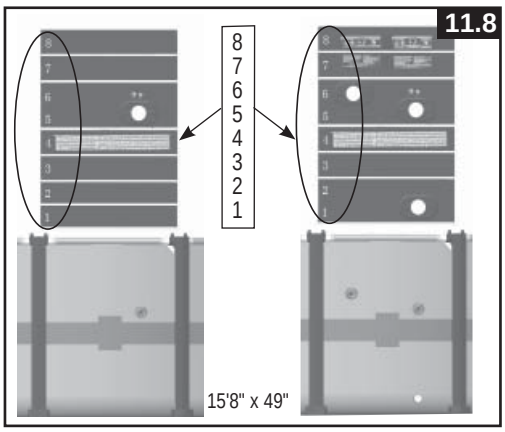

4b. Side panel with "warnings" installation

- Locate the side panel with warnings such that the warnings will be easily seen by pool users before entering the pool. Unwrap the side boards from pack and slide the side board first down the support posts and insert onto the vertical edge of the bottom rail. Follow with the number sequence from bottom to top. The groove of the board needs to be inserted fully onto the tongue of the previous board. The printing on the side boards needs to be facing outward **(see drawings 12.1 & 12.2)**.

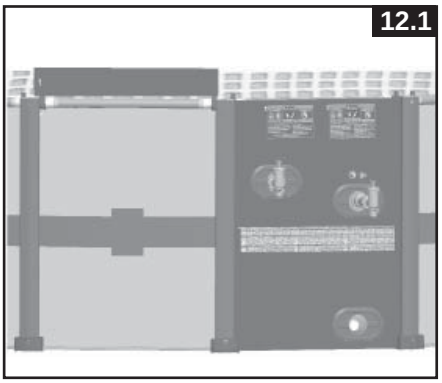

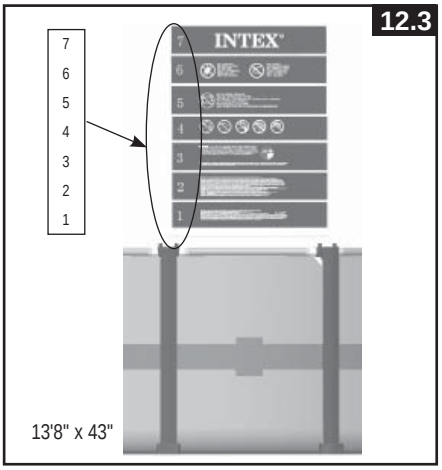

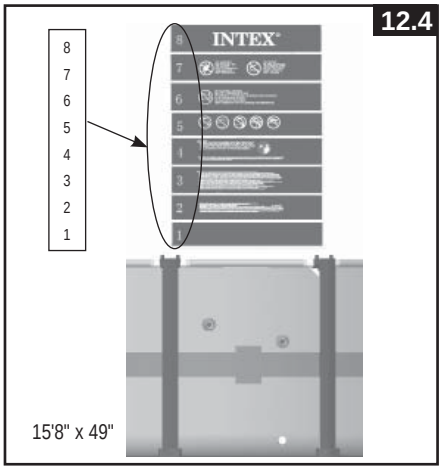

POOL ENCLOSURE SETUP (continued)

4c. Other side panel installation

- Install the side boards one by one from bottom to top. Insert the groove of the first side board onto the vertical edge of the bottom rail, and the groove of the other side boards onto the tongue of each previous board. The side boards with wood veins printed need to be faced outward **(see drawings 13.1 & 13.2)**.

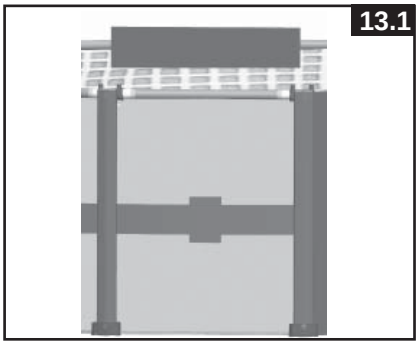

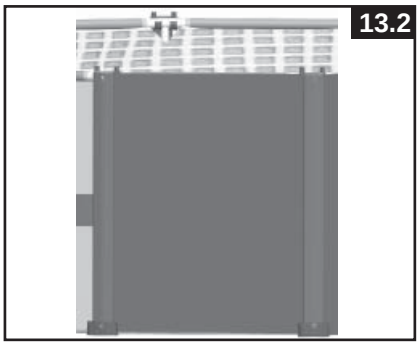

5. Top Board Installation

Attach the top board **(12)** on the top of the side panel, with the holes at its two ends aligning with the nuts on the top clamps **(13)**. Make sure the groove underneath the top board fits firmly onto the tongue of the top board **(12)**. Repeat this procedure until all the top boards are fixed to the top clamps and side boards. **NOTE:** There are four pieces of top board which are printed with warnings. Install those four top boards three pieces apart from each other **(see drawings 14.1, 14.2 & 14.3)**.

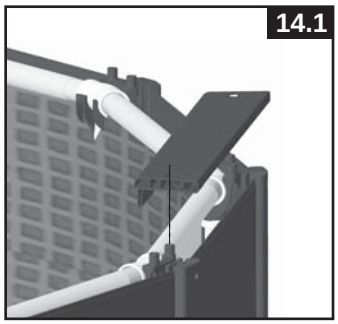

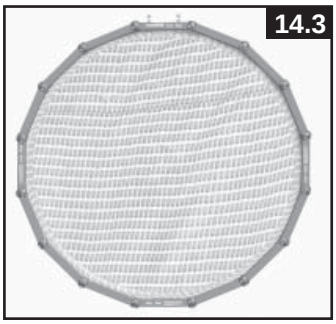

6. Top Clamp Cover Installation

Install the top clamp cover **(11)** where the two top boards meet. Insert the ridge of top clamp cover into the slot on the top end of the support post. Align the top holes on top clamp cover with the nuts of the top clamp. Insert and screw bolt **(10)** to each of the threaded holes by using the wrench **(22)** provided, and then cover with the waterproof caps **(9)**. Repeat this procedure until all the top clamp covers are fixed to the top clamps and support posts **(see drawings 15.1, 15.2 & 15.3)**.

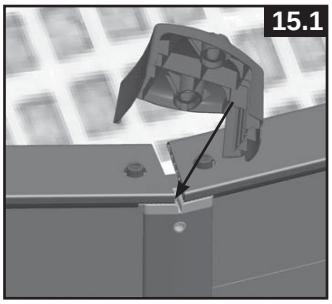

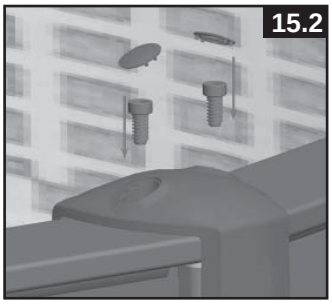

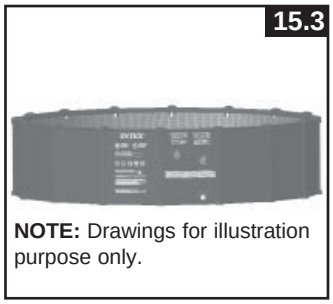

NOTE: Drawings for illustration purpose only.

POOL MAINTENANCE & CHEMICALS

⚠ WARNING

REMEMBER TO

- **Protect all pool occupants from possible water-related illnesses by keeping the pool water clean and sanitized. Do not swallow the pool water. Always practice good hygiene.**
- **Keep your pool clean and clear. The pool floor must be visible at all times from the outside barrier of the pool.**
- **Keep children away from pool covers to avoid entanglement, drowning, or other serious injury.**

Water maintenance

The maintenance of a proper water balance through appropriate use of sanitizers is the single most important factor in maximizing the life and appearance of the liner as well as ensuring clean, healthy and safe water. Proper technique is important for water testing and treating the pool water. See your pool professional for chemical, test kits and testing procedures. Be sure to read and follow the written instructions from the chemical manufacturer.

1. Never let chlorine come in contact with the liner if it is not completely dissolved. Dissolve granular or tablet chlorine first in a bucket of water, then add it to the pool water. Likewise with liquid chlorine; mix it immediately and thoroughly with the pool water.
2. Never mix chemicals together. Add the chemicals to the pool water separately. Thoroughly dissolve each chemical before adding another one to the water.
3. An Intex pool skimmer and an Intex pool vacuum are available to assist in maintaining clean pool water. See your pool dealer for these pool accessories.
4. Do not use a pressure washer to clean the pool.

TROUBLESHOOTING

PROBLEM	DESCRIPTION	CAUSE	SOLUTION
ALGAE	• Greenish water. • Green or black spots on pool liner. • Pool liner is slippery and/or has a bad odor.	• Chlorine and pH level need adjustment.	• Super chlorinate with shock treatment. Correct pH to your pool store's recommended level. • Vacuum pool bottom. • Maintain proper chlorine level.
COLORED WATER	• Water turns blue, brown, or black when first treated with chlorine.	• Copper, iron or manganese in water being oxidized by the added chlorine.	• Adjust pH to recommended level. • Run filter until water is clear. • Replace cartridge frequently.
FLOATING MATTER IN WATER	• Water is cloudy or milky.	• "Hard water" caused by a too high pH level. • Chlorine content is low. • Foreign matter in water.	• Correct the pH level. Check with your pool dealer for advice. • Check for proper chlorine level. • Clean or replace your filter cartridge.
CHRONIC LOW WATER LEVEL	• Level is lower than on previous day.	• Rip or hole in pool liner or hoses.	• Repair with patch kit. • Finger tighten all caps. • Replace the hoses.
SEDIMENT ON POOL BOTTOM	• Dirt or sand on pool floor.	• Heavy use, getting in and out of pool.	• Use Intex pool vacuum to clean bottom of pool.
SURFACE DEBRIS	• Leaves, insects etc.	• Pool too close to trees.	• Use Intex pool skimmer.

POOL MAINTENANCE & DRAINAGE

⚠ CAUTION ALWAYS FOLLOW THE CHEMICAL MANUFACTURER'S DIRECTIONS, AND THE HEALTH AND HAZARD WARNINGS.

Do not add chemicals if the pool is occupied. This can cause skin or eye irritation. Concentrated chlorine solutions can damage the pool liner. In no event is Intex Recreation Corp., Intex Development Co. Ltd., their related companies, authorized agents and service centers, retailers or employees liable to the buyer or any other party for costs associated with the loss of pool water, chemicals or water damage. **Keep spare filter cartridges on hand. Replace cartridges every two weeks.** We recommend the use of a Krystal Clear™ Intex Filter Pump with all of our above-ground-pools.

EXCESSIVE RAIN: To avoid damage to the pool and over filling, immediately drain rain water that causes the water level to be higher than the maximum.

How to Drain Your Pool and Long Term Storage

1. Check local regulations for specific directions regarding disposal of swimming pool water.
2. Check to make sure that the drain plug inside the pool is plugged in place.
3. Remove the cap from the drain valve on the outside pool wall.
4. Attach the female end of the garden hose to the drain connector.
5. Place the other end of the hose in an area where the water can be safely drained away from the house and other nearby structures.
6. Attach the drain connector to the drain valve. **NOTE: The drain connector will push the drain plug open inside the pool and water will start to drain immediately.**
7. When the water stops draining, start lifting the pool from the side opposite the drain, leading any remaining water to the drain and emptying the pool completely.
8. Disconnect hose and adapter when finished.
9. Re-insert drain plug in drain valve on inside of pool for storage.
10. Replace drain cap on outside of pool.
11. Reverse set-up instructions to disassemble the enclosure and pool, and remove all connecting parts.
12. Be sure that the pool and all parts are completely dry before storage. Air dry the liner in the sun until completely dry before folding **(see drawing 16)**. Sprinkle some talcum powder to prevent the vinyl from sticking together and to absorb any residual missed.
13. Create a square shape. Starting at one side, fold one-sixth of liner in on itself twice. Do the same on the opposite side **(see drawings 17.1 & 17.2)**.
14. Once you have created two opposing folded sides, simply fold one over the other like closing a book **(see drawings 18.1 & 18.2)**.
15. Fold the two long ends to the middle **(see drawing 19)**.
16. Fold one over the other like closing a book and finally compact the liner **(see drawing 20)**.
17. Store the liner and accessories in a dry, temperature controlled, between 32 degrees Fahrenheit (0 degrees Celsius) and 104 degrees Fahrenheit (40 degrees Celsius), storage location.
18. The original packing can be used for storage.

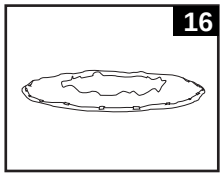

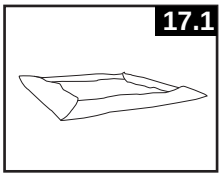

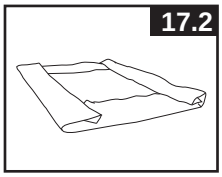

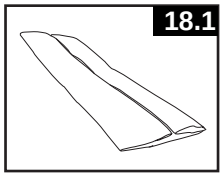

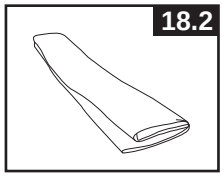

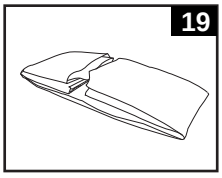

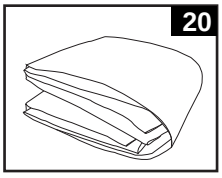

WINTER PREPARATIONS

Winterizing your Above Ground Pool

After usage, you can easily empty and store away your pool in a safe place. You must drain, disassemble and properly store the pool when the temperature drops below 41 degrees Fahrenheit (5 degrees Celsius) to prevent ice damage to the pool and related components. Ice damage can result in sudden liner failure or pool collapse. Also see the section "How To Drain Your Pool''.

Should temperatures in your area not drop below 41 degrees Fahrenheit (5 degrees Celsius), and you choose to leave your pool out, prepare it as follows:

1. Clean the pool water thoroughly. If the type is an Easy Set Pool or an Oval Frame Pool, make sure that the top ring is properly inflated.
2. Remove the skimmer (if applicable) or any accessories attached to the threaded strainer connector. Replace strainer grid if necessary. Be sure all accessories parts are clean and completely dry before storage.
3. Plug the Inlet and Outlet fitting from the inside of the pool with the plug provided (sizes 16' and below). Close the Inlet and Outlet Plunger Valve (sizes 17' and above).
4. Remove the ladder (if applicable) and store in a safe place. Be sure the ladder is completely dry before storage.
5. Remove the hoses that connect the pump and filter to the pool.
6. Add the appropriate chemicals for the winter period. Consult your local pool dealer as to which chemicals you should use and how to use them. This can vary greatly by region.
7. Cover pool with Intex Pool Cover. **IMPORTANT NOTE: INTEX POOL COVER IS NOT A SAFETY COVER.**
8. Clean and drain the pump, filter housing and hoses. Remove and discard the old filter cartridge. Keep a spare cartridge for the next season.
9. Bring pump and filter parts indoors and store in a safe and dry area, preferably between 32 degrees Fahrenheit (0 degrees Celsius) and 104 degrees Fahrenheit (40 degrees Celsius).

GENERAL AQUATIC SAFETY

Water recreation is both fun and therapeutic. However, it involves inherent risks of injury and death. To reduce your risk of injury, read and follow all product, package and package insert warnings and instructions. Remember, however, that product warnings, instructions and safety guidelines cover some common risks of water recreation, but do not cover all risks and or dangers.

For additional safeguards, also familiarize yourself with the following general guidelines as well as guidelines provided by nationally recognized Safety Organizations:

- Demand constant supervision. A competent adult should be appointed as a "lifeguard" or water watcher, especially when children are in and around the pool.
- Learn to swim.
- Take the time to learn CPR and first aid.
- Instruct anyone who is supervising pool users about potential pool hazards and about the use of protective devices such as locked doors, barriers, etc.
- Instruct all pool users, including children what to do in case of an emergency.
- Always use common sense and good judgement when enjoying any water activity.
- Supervise, supervise, supervise.

LIMITED WARRANTY

Your Intex Pool has been manufactured using the highest quality materials and workmanship. All Intex products have been inspected and found free of defects prior to leaving the factory. This Limited Warranty applies to the Intex Pool only.

This limited warranty is in addition to, and not a substitute for, your legal rights and remedies. To the extent that this warranty is inconsistent with any of your legal rights, they take priority. For example, consumer laws across the European Union provide statutory warranty rights in addition to the coverage you receive from this limited warranty: for information on EU-wide consumer laws, please visit the European Consumer Center website at http://ec.europa.eu/consumers/ecc/contact_en/htm.

The provisions of this Limited Warranty apply only to the original purchaser and are not transferable. This Limited Warranty is valid for a period of 90 days from the date of the initial retail purchase. Keep your original sales receipt with this document, as proof of purchase will be required and must accompany warranty claims or the Limited Warranty will be invalid.

If you find a manufacturing defect in the Intex Pool during the warranty period, please contact the appropriate Intex Service Center listed in the separate "Authorized Service Centers" sheet. If the item is returned as directed by the Intex Service Center, the Service Center will inspect the item and determine the validity of the claim. If the item is covered by the provisions of the warranty, the item will be repaired or replaced, with the same or comparable item (at Intex's choice) at no charge to you.

Other than this warranty, and other legal rights in your country, no further warranties are implied. To the extent possibly in your country, in no event shall Intex be liable to you or any third party for direct or consequential damages arising out of the use of your Intex Pool, or Intex or its agents' and employees' actions (including the manufacture of the product). If your country does not allow the exclusion or limitation of incidental or consequential damages, this limitation or exclusion does not apply to you.

You should note that this limited warranty does not apply in the following circumstances:

- If the Intex Pool is subject to negligence, abnormal use or application, accident, improper operation, improper maintenance or storage.
- If the Intex Pool is subject to damage by circumstances beyond Intex's control, including but not limited to, punctures, tears, abrasions, ordinary wear and tear and damage caused by exposure to fire, flood, freezing, rain, or other external environmental forces;
- To parts and components not sold by Intex; and/or
- To unauthorized alterations, repairs or disassembly to the Intex Pool by anyone other than Intex Service Center personnel.

The costs associated with the loss of pool water, chemicals or water damages are not covered by this warranty. Injury or damage to any property or person is not covered by this warranty.

Read the owner's manual carefully and follow all instructions regarding proper operation and maintenance of your Intex Pool. Always inspect your product prior to use. This limited warranty will be void if use instructions are not followed.